metabo HPT

ELECTRIC TOOL PARTS LIST

■ CORDLESS CAULK GUN 2022 • 05 • 26

Model AC 18DA (E1)

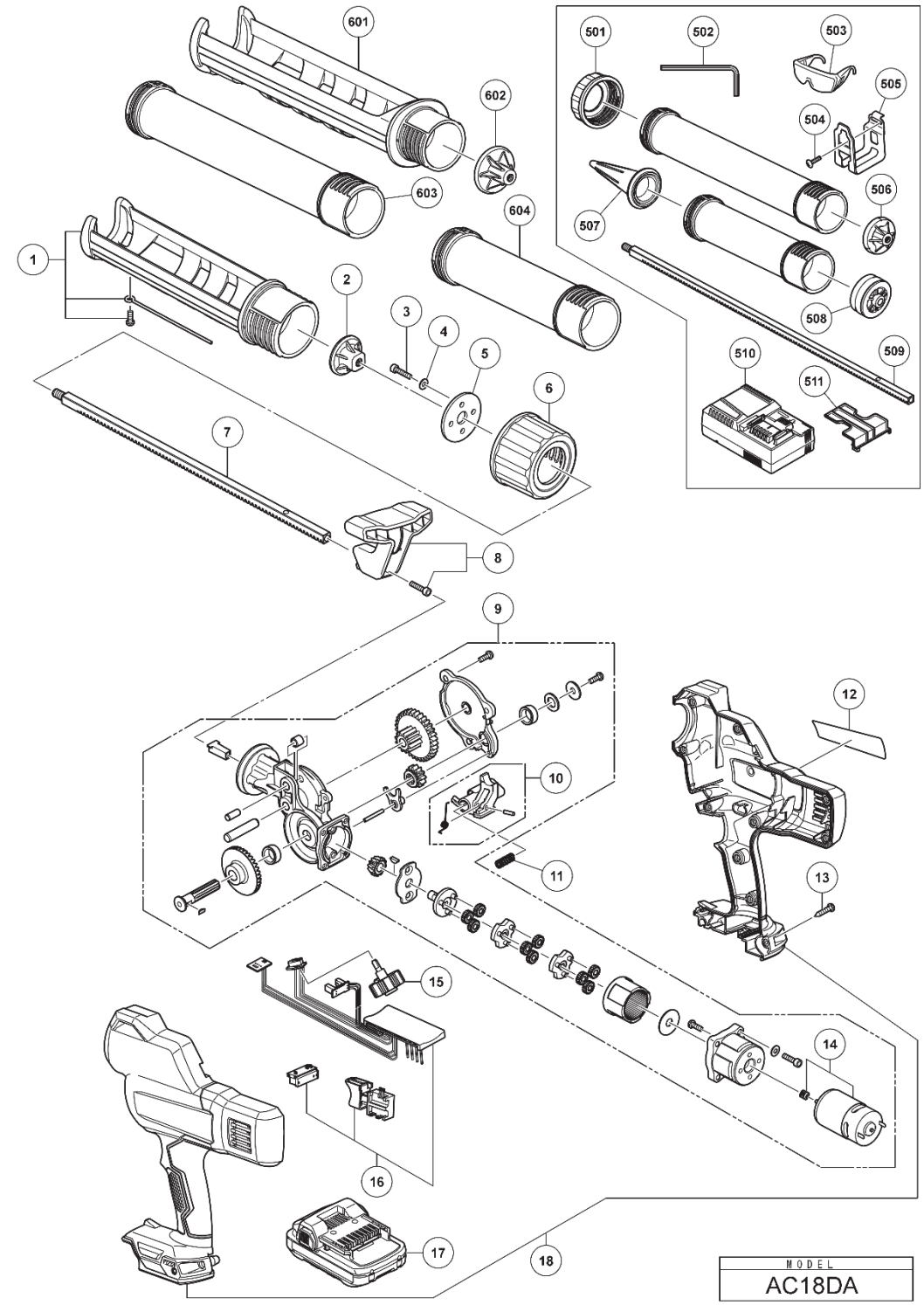

Rev.1

ITEM NO.	CODE NO.	DESCRIPTION	NO. USED	REMARKS
1	378873	HOLDER 300ML	1	
2	378863	CARTRIDGE PISTON	1	
3	378964	SCREW M5 SET (4 PCS.)	4	
4	378965	TOOTHED LOCK WASHER SET (4 PCS.)	4	
5	378966	NUT CLAMP	1	
6	378864	HOLDER NUT	1	
7	378865	PLUNGER ROD (300/400)	1	
8	378875	RACK HANDLE SET	1	
9	378874	GEAR MOTOR ASS'Y	1	INCLUD.10.14
10	378876	SIDE BUTTON	1	
11	378866	SPRING	1	
12		NAME PLATE	1	
13	378879	TAPPING SCREW SET (11 PCS.)	11	
14	378877	MOTOR	1	
15	378862	DIAL	1	
16	378878	SWITCH CONTROLLER SET	1	
**18	378880M	HOUSING SET	1	FOR USA.CAN

STANDARD ACCESSORIES

AC18DA

ITEM NO.	CODE NO.	DESCRIPTION	NO. USED	REMARKS
501	378870	HOLDER CAP	1	
502	944458	HEX. BAR WRENCH 4MM	1	
503	875769	PROTECTIVE GLASSES	1	
504	373378	TRUSS HD. SCREW M4 (BLACK)	1	
505	373035	HOOK	1	
506	378868	SAUSAGE PISTON	1	
507	378871	NOZZLE	1	
508	378869	SUCTION PISTON	1	
509	378867	PLUNGER ROD (600/800)	1	

OPTIONAL ACCESSORIES

ITEM NO.	CODE NO.	DESCRIPTION	NO. USED	REMARKS
**601	378613M	HOLDER SET 800ML	1	INCLUD.8.502.509.602 FOR USA.CAN
**602	378872	JOIST PISTON	1	FOR CHN.TPE.THA.MAL.NZL.AUS.USA.CAN
**603	378712M	HOLDER SET 600ML	1	INCLUD.8.501.502.506-509 FOR USA.CAN