metabo HPT

ELECTRIC TOOL PARTS LIST

■ CORDLESS RECIPROCATING SAW 2022 • 06 • 30

Model CR 18DB (E1)

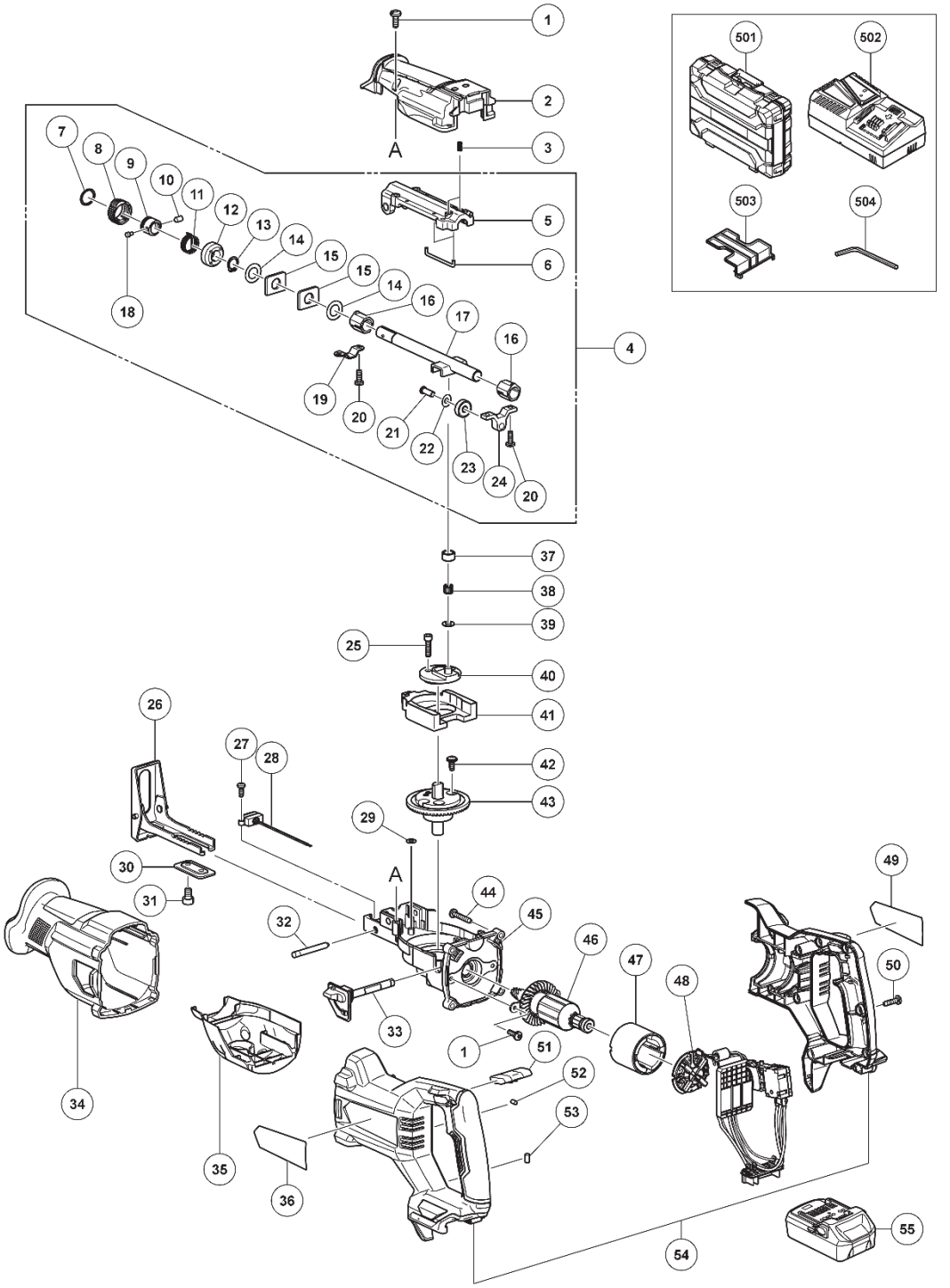

Rev.1

MODEL
CR18DB

PARTS

CR18DB

ITEM NO.	CODE NO.	DESCRIPTION	NO. USED	REMARKS
1	379178	THREAD FORMING SCREW (B)	6	
2	379176	GEAR CASE COVER	1	
3	379177	SPRING	2	
4	379175	PLUNGER ASS'Y	1	INCLUD.5-24
5	379202	BEVEL SUPPORT	1	
6	379195	CLAMP WIRE	2	
7	379180	CLIP	1	
8	379181	ROTATE BUSH	1	
9	379183	BUSH	1	
10	379184	DETENT PIN	1	
11	379185	TORSION SPRING	1	
12	379186	SLEEVE	1	
13	379187	CIRCLIPS FOR SHAFT	1	
14	379188	WASHER	2	
15	379189	FELT BLOCK	2	
16	379190	ALIGNING BEARING	2	
17	379196	PLUNGER	1	
18	379182	LOCATED PIN	1	
19	379191	BEARING CLAMP	1	
20	379198	THREAD FORMING SCREW (C)	4	
21	379192	CLEVIS PIN WITH HEAD	1	
22	379193	PLAIN WASHER	1	
23	379194	BALL BEARING	1	
24	379197	BEARING SUPPORT	1	
25	379170	HEX. SOCKET SCREW (B)	2	
26	379165	PIVOT SHOE	1	
27	379167	THREAD FORMING SCREW (A)	2	
28	379166	LED	1	
29	379164	WASHER (A)	1	
30	379163	CLAMP	1	
31	379162	HEX. SOCKET SCREW (A)	2	
32	379174	PIN (A)	1	
33	379209	PENDULUM LEVER	1	
34	379154	FRONT HANDLE	1	
35	379155	SUPPORT	1	
36		NAME PLATE	1	
37	379173	CRANK ROLLER	1	
38	379172	NEEDLE BEARING (A)	1	
39	379171	WASHER (B)	1	
40	379201	ECCENTRICK BLOCK	1	
41	379169	COUNTER WEIGHT	1	
42	379168	SCREW WITH WASHER	2	
43	379210	TRANSMISSION	1	
44	379156	TAPPING SCREW (A)	4	
45	379200	GEAR CASE	1	
46	361191	ROTER SET	1	
47	379179	MAGNET	1	
48	379161	ELECTRIC ASS'Y	1	
49		BRAND LABEL	1	
50	379157	TAPPING SCREW (B)	11	
51	379159	LOCK BUTTON	1	
52	379160	RUBBER STICK (B)	1	
53	379158	RUBBER STICK (A)	1	
54	379199	HOUSING SET	1	

STANDARD ACCESSORIES

CR18DB

ITEM NO.	CODE NO.	DESCRIPTION	NO. USED	REMARKS
504	944458	HEX. BAR WRENCH 4MM	1	

OPTIONAL ACCESSORIES

ITEM NO.	CODE NO.	DESCRIPTION	NO. USED	REMARKS