metabo HPT

ELECTRIC TOOL PARTS LIST

■ CORDLESS MULTI TOOL 2023 • 11 • 16

Model CV 18DA (E1)

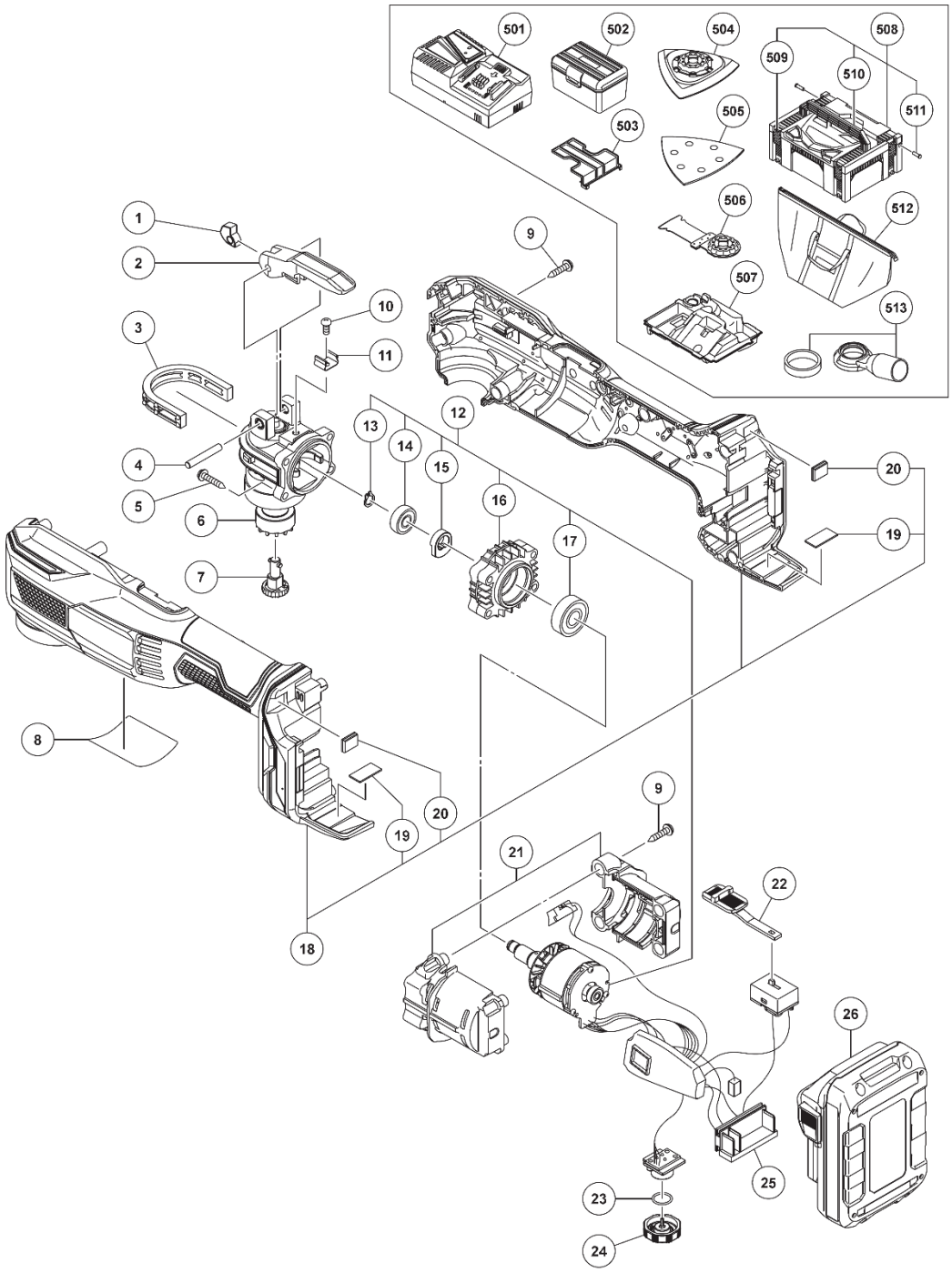

Rev.1

MODEL
CV18DA

PARTS

CV18DA

ITEM NO.	CODE NO.	DESCRIPTION	NO. USED	REMARKS
**1	381392	PUSHING PIECE	1	FOR USA.CAN
**2	380994	LEVER	1	FOR USA.CAN
3	380989	HEAD RUBBER	1	
4	337668	NEEDLE ROLLER	1	
5	303694	TAPPING SCREW (W/FLANGE) D4X35 (BLACK)	4	
6	380980	HEAD CASE	1	
7	380981	TOOL SHAFT	1	
8		NAME PLATE	1	
9	301653	TAPPING SCREW (W/FLANGE) D4X20 (BLACK)	13	
10	337670	SEAL LOCK SCREW M4X6	1	
11	337669	LEVER GUIDE	1	
12	380984	WIRING ASS'Y	1	INCLUD.13-17.25
13	994251	RETAINING RING FOR D7 SHAFT	1	
14	380987	BALL BEARING-R 607	1	
15	380988	BALANCER	1	
16	380986	BEARING HOLDER	1	
17	6000VV	BALL BEARING 6000VVCMPS2L	1	
**18	380992M	HOUSING (A).(B) SET	1	INCLUD.19.20 FOR USA.CAN
19	338434	RUBBER CUSHION (B)	2	
20	370321	DAMPER (A)	2	
21	380990	MOTOR CASE (A).(B) SET	1	
22	380993	SWITCH KNOB	1	
23	987105	O-RING (S-10)	1	
24	379151	DIAL	1	
25	376361	BATTERY TERMINAL	1	
**26	377797M	BATTERY BSL 1820M (USA.CAN)	1	INCLUD.503

STANDARD ACCESSORIES

CV18DA

ITEM NO.	CODE NO.	DESCRIPTION	NO. USED	REMARKS
501		CHARGER (MODEL UC 18YFSL)	1	
**502	337685	TOOL BOX	1	FOR EUROPE.USA.CAN
503	329897	BATTERY COVER	1	
**506		MULTI TOOL BLADE (MSD32PBC)	1	FOR USA.CAN
**512	375801M	TOOL BAG	1	FOR USA.CAN

OPTIONAL ACCESSORIES

ITEM NO.	CODE NO.	DESCRIPTION	NO. USED	REMARKS
601	376066	DUST COLLECTION ADAPTER SET	1	INCLUD.602
602	376118	FELT PACKING	1	