metabo HPT

ELECTRIC TOOL PARTS LIST

■ ELECTRIC AIR COMPRESSOR 2020 • 09 • 17
Model EC 914S (E1)

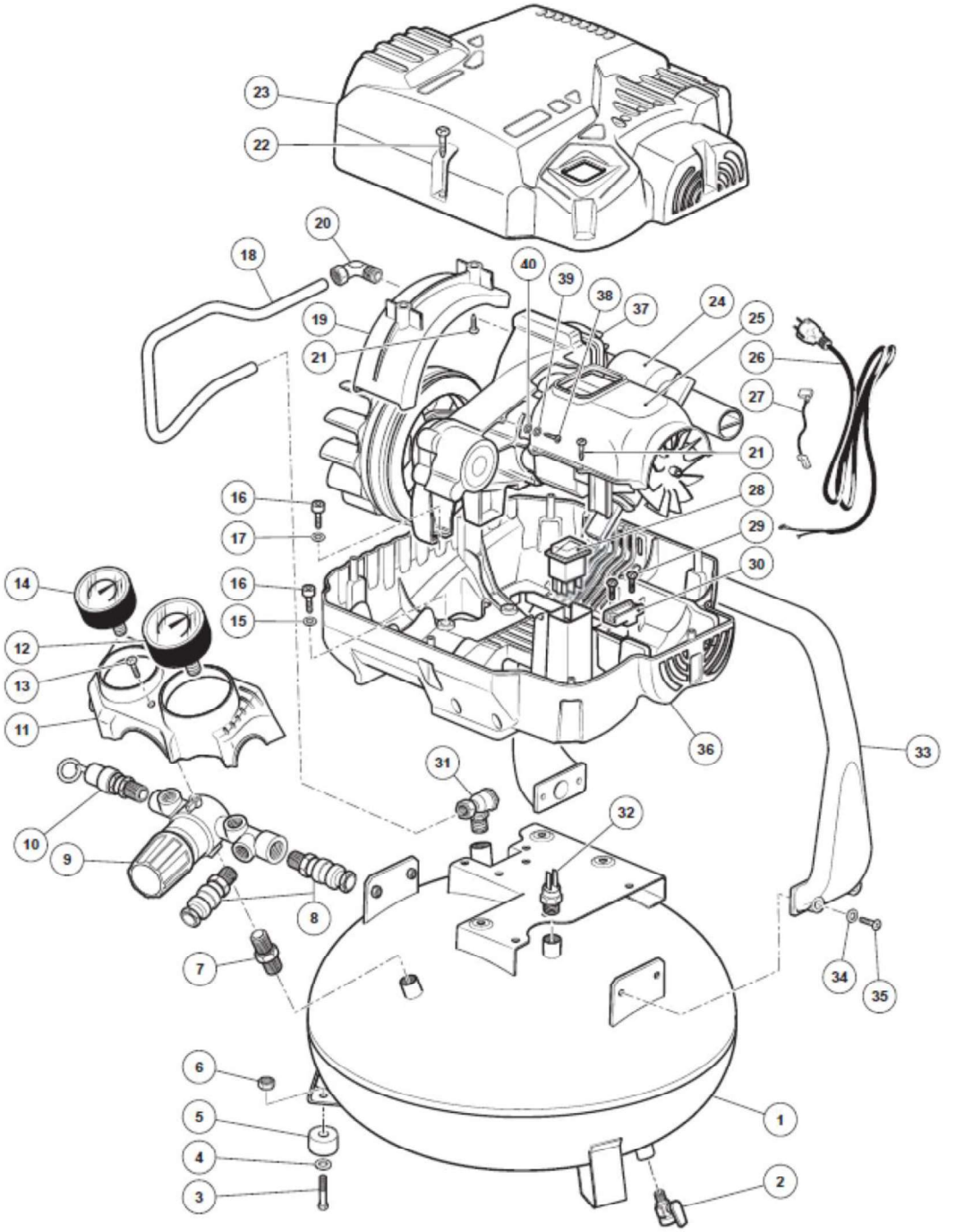

MODEL
EC914S

Rev.1

ITEM NO.	CODE NO.	DESCRIPTION	NO. USED	REMARKS
1	890341	AIR TANK	1	
2	890342	DRAINING VALVE	1	
3	890343	SCREW TCEI M6X25	3	
4	890344	WASHER 6X12X1.5	3	
5	890345	FOOT	3	
6	890346	LOCKING NUT M6	3	
7	890347	DOUBLE SCREW ¼”	1	
8	890348	QUICK COUPLING	2	
9	890349	PRESSURE REDUCER	1	
10	890350	SAFETY VALVE	1	
11	890351	CONTROL PANEL	1	
12	890352	GAUGE 2”	1	
13	890353	SCREW TCEI 5X10	1	
14	890354	GAUGE 1.5”	1	
15	890344	WASHER 6X12X1.5	4	
16	890355	SCREW TCEI M6X20	7	
17	890356	WASHER 16X6.5X2	3	
18	890357	DELIVERY PIPE	1	
19	890358	BULKHEAD	1	
20	890359	ELBOW 3/8”	1	
21	890360	SCREW PARKER 3.9X13	5	
22	890361	SCREW TC 5X23	6	
23	890362	SHROUD TOP HALF	1	
24	890363	AIR FILTER	1	
25	890364	MOTOT STACK PROTECTOR	1	
26	890365	POWER CORD W/PLUG	1	
27	890366	JUMPER	1	
28	890367	ROCKER SWITCH	1	
29	890368	SCREW PARKER 309X16	2	
30	890369	LOCK CABLE	1	
31	890370	CHECK VALVE	1	
32	890371	PRESSURE SWITCH	1	
33	890372	HANDLE (METAL)	1	
34	890373	WASHER 6X14X1.5	4	
35	890374	SCREW TCEI 6X14	4	
36	890375	SHROUD BOTTOM HALF	1	
37	890376	PUMP OL297 120/60	1	
38	890377	SCREW (GROUNDING) 4X8 TT	1	
39	890378	WASHER D4	1	
40	890379	WASHER SPRING D4	1	

ITEM NO.	CODE NO.	DESCRIPTION	NO. USED	REMARKS

STANDARD ACCESSORIES

ITEM NO.	CODE NO.	DESCRIPTION	NO. USED	REMARKS

OPTIONAL ACCESSORIES

ITEM NO.	CODE NO.	DESCRIPTION	NO. USED	REMARKS