metabo HPT

# ELECTRIC TOOL PARTS LIST

## ■ DISC GRINDER 2021 • 05 • 25

## Model G 12BYEQ (E1)

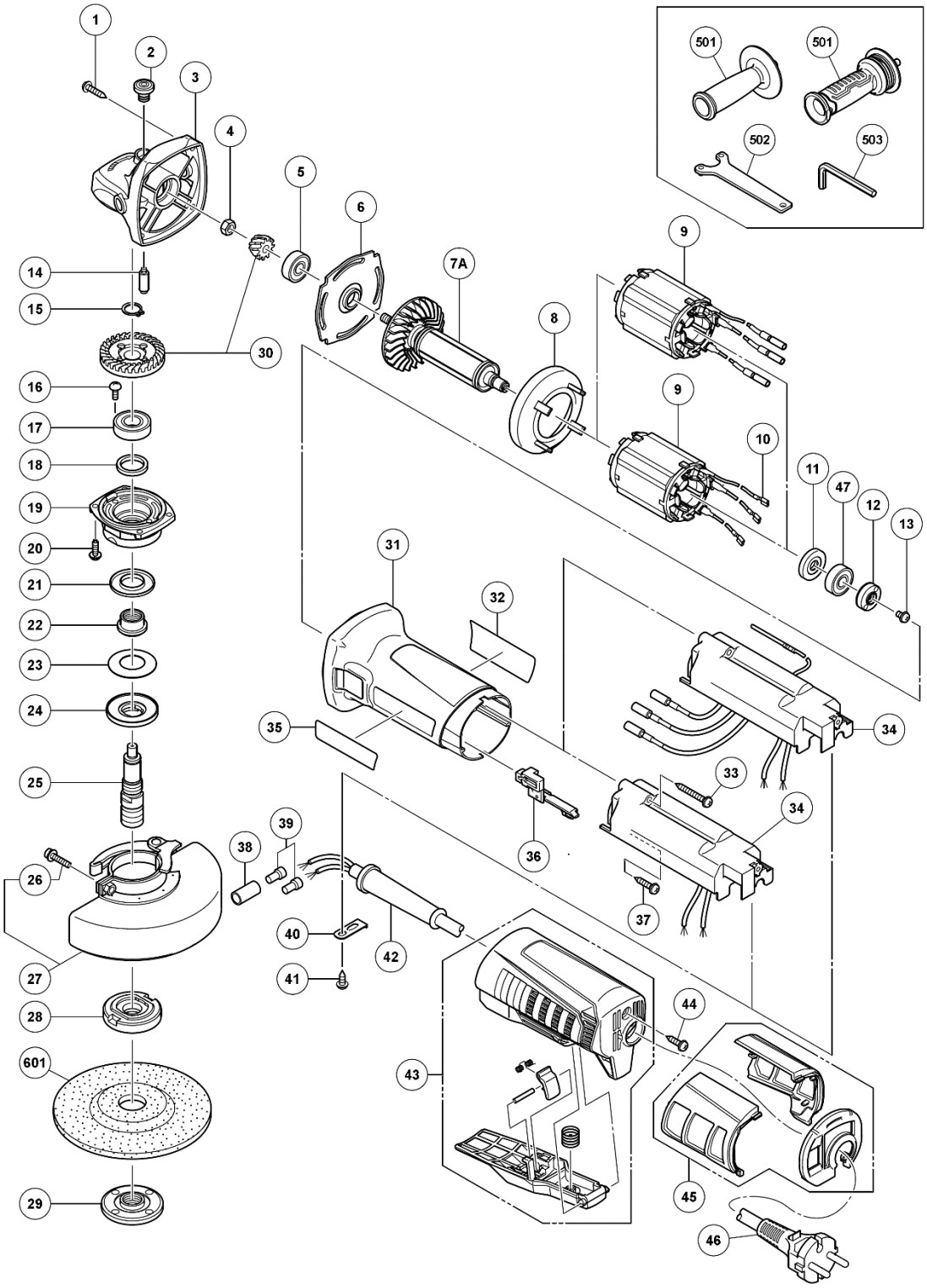


Rev.3
25.12.2020

| MODEL |
|---|
| G12BYEQ |

| ITEM NO. | CODE NO. | DESCRIPTION | NO. USED | REMARKS |
|---|---|---|---|---|
| 1 | 328643 | TAPPING SCREW (W/FLANGE) D4X23 (BLACK) | 4 | |
| 2 | 301944 | PUSHING BUTTON | 1 | |
| 3 | 338332 | GEAR COVER ASS'Y | 1 | INCLUD.2.14 |
| 4 | 309191 | SPECIAL NUT M6 | 1 | |
| 5 | 338337 | BALL BEARING 608SS | 1 | |
| 6 | 334940 | BEARING HOLDER | 1 | |
| 7A | 361154 | ROTOR | 1 | |
| 8 | 338346 | FAN GUIDE | 1 | |
| **9 | 340961D | STATOR ASS'Y 110V-120V | 1 | INCLUD.10 |
| 10 | 370131 | FASTON | 3 | FOR 110V-120V |
| 11 | 338336 | DUST SEAL | 1 | |
| 12 | 374287 | SENSOR MAGNET | 1 | |
| 13 | 338341 | SEAL LOCK SCREW (W/WASHER) M3X5 | 1 | |
| 14 | 301943 | LOCK PIN | 1 | |
| 15 | 939542 | RETAINING RING FOR D12 SHAFT (10 PCS.) | 1 | |
| 16 | 334942 | SLOTTED HD. SCREW (SEAL LOCK) M4 | 2 | |
| 17 | 6001DD | BALL BEARING 6001DDCMPS2L | 1 | |
| 18 | 372126 | FELT PACKING | 1 | |
| 19 | 372123 | PACKING GLAND | 1 | |
| 20 | 307127 | SEAL LOCK SCREW (W/SP. WASHER) M4X12 | 4 | |
| 21 | 372183 | FRINGER | 1 | |
| 22 | 371672 | SLEEVE (B) | 1 | |
| 23 | 371673 | BELLEVILLE SPRING (B) | 1 | |
| 24 | 371674 | SUPPORT BODY (B) | 1 | |
| **25 | 373073 | SPINDLE (G) | 1 | FOR USA.CAN |
| 26 | 316107 | HEX. SOCKET HD. BOLT (W/WASHERS) M5X20 | 1 | |
| 27 | 337229 | WHEEL GUARD ASS'Y (TOOLLESS TYPE) | 1 | INCLUD.26 |
| **28 | 373071 | WHEEL WASHER (E) | 1 | FOR USA.CAN |
| **29 | 937923P | WHEEL NUT 5/8"-11UNC | 1 | FOR USA.CAN |
| 30 | 338338 | GEAR AND PINION SET | 1 | |
| 31 | 376312 | HOUSING | 1 | |
| 32 | | LABEL | 1 | |
| 33 | 306664 | TAPPING SCREW (W/FLANGE) D4X40 (BLACK) | 1 | |
| **34 | 376205 | CONTROLLER 110V-120V | 1 | |
| 35 | | LABEL | 1 | |
| 36 | 376208 | SWITCH LEVER | 1 | |
| 37 | 301653 | TAPPING SCREW (W/FLANGE) D4X20 (BLACK) | 1 | |
| 39 | 959140 | CONNECTOR 50091 (10 PCS.) | 2 | |
| 40 | 338334 | CORD CLIP | 1 | |
| 41 | 305720 | TAPPING SCREW (W/FLANGE) D4X12 | 1 | |
| 42 | 953327 | CORD ARMOR D8.8 | 1 | |
| 43 | 376209 | TAIL COVER SET | 1 | |
| 44 | 307811 | TAPPING SCREW (W/FLANGE) D4X16 (BLACK) | 1 | |
| 45 | 376313 | FILTER SET | 1 | |
| **46 | 500434Z | CORD | 1 | (CORD ARMOR D8.8) FOR USA.CAN |
| 47 | 608DDM | BALL BEARING 608DD | 1 | |

## STANDARD ACCESSORIES

G12BYEQ

| ITEM NO. | CODE NO. | DESCRIPTION | NO. USED | REMARKS |
|---|---|---|---|---|
| **501 | 994322 | SIDE HANDLE | 1 | |
| 502 | 938332Z | WRENCH | 1 | |
| 503 | 944458 | HEX. BAR WRENCH 4MM | 1 | |

## OPTIONAL ACCESSORIES

| ITEM NO. | CODE NO. | DESCRIPTION | NO. USED | REMARKS |
|---|---|---|---|---|
| 601 | 316821 | D. C. WHEELS 115MM A36Q (25 PCS.) | 1 | |
| **602 | 938317 | RUBBER PAD | 1 | FOR USA.CAN |
| **603 | 938318 | WASHER NUT | 1 | FOR USA.CAN |