metabo HPT

ELECTRIC TOOL PARTS LIST

■ LED WORK LIGHT

2022 • 09 • 15

Model UB 18DB

(E1)

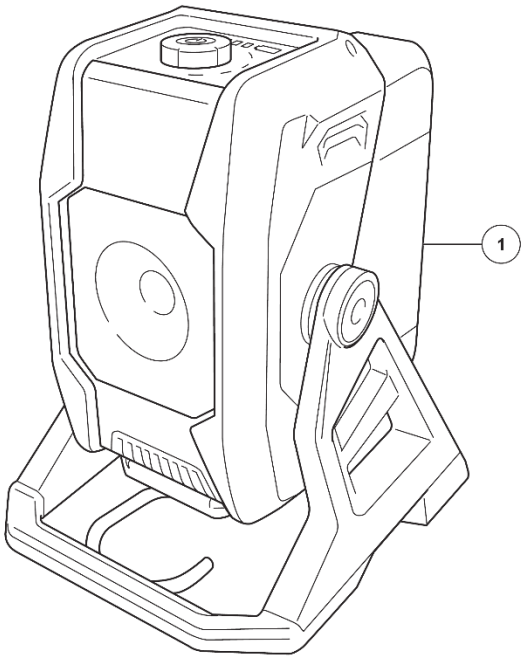

MODEL
UB18DB

Rev.1

PARTS

UB18DB

ITEM NO.	CODE NO.	DESCRIPTION	NO. USED	REMARKS
1		MAIN BODY	1	

STANDARD ACCESSORIES

UB18DB

ITEM NO.	CODE NO.	DESCRIPTION	NO. USED	REMARKS

OPTIONAL ACCESSORIES

ITEM NO.	CODE NO.	DESCRIPTION	NO. USED	REMARKS