metabo HPT

ELECTRIC TOOL PARTS LIST

■ LED WORK LIGHT 2022 • 04 • 27

Model UB 18DD (E1)

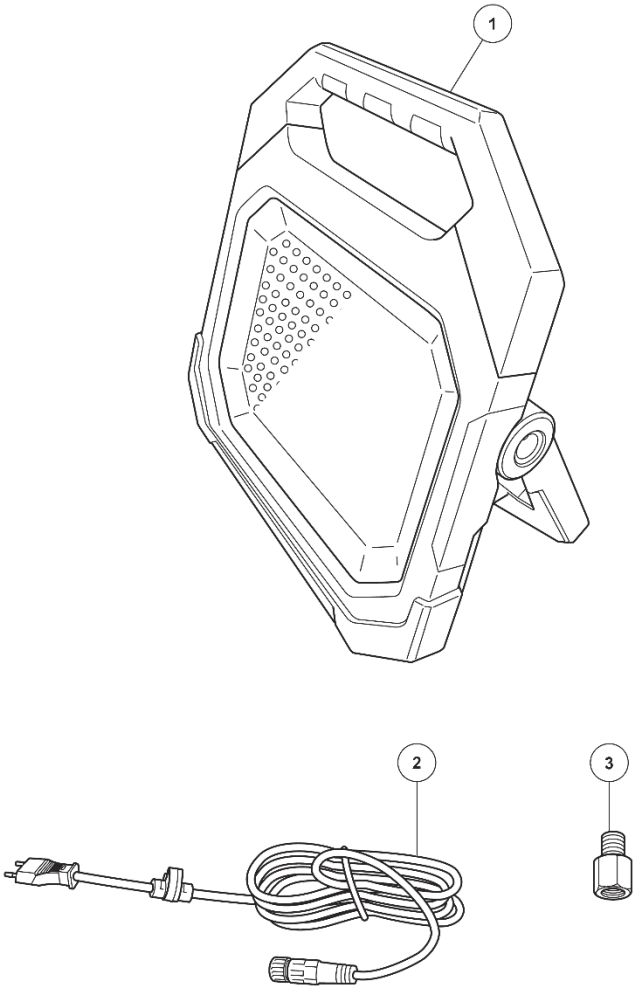

MODEL
UB18DD

Rev.1

PARTS

UB18DD

ITEM NO.	CODE NO.	DESCRIPTION	NO. USED	REMARKS
1		MAIN BODY	1	
**2	378691	AC CORD (USA)	1	FOR USA.CAN
3	378695	ADAPTER	1	

STANDARD ACCESSORIES

UB18DD

ITEM NO.	CODE NO.	DESCRIPTION	NO. USED	REMARKS

OPTIONAL ACCESSORIES

ITEM NO.	CODE NO.	DESCRIPTION	NO. USED	REMARKS