metabo HPT

ELECTRIC TOOL PARTS LIST

■ CORDLESS TORCH LIGHT 2022 • 08 • 23

Model UB 18DE (E1)

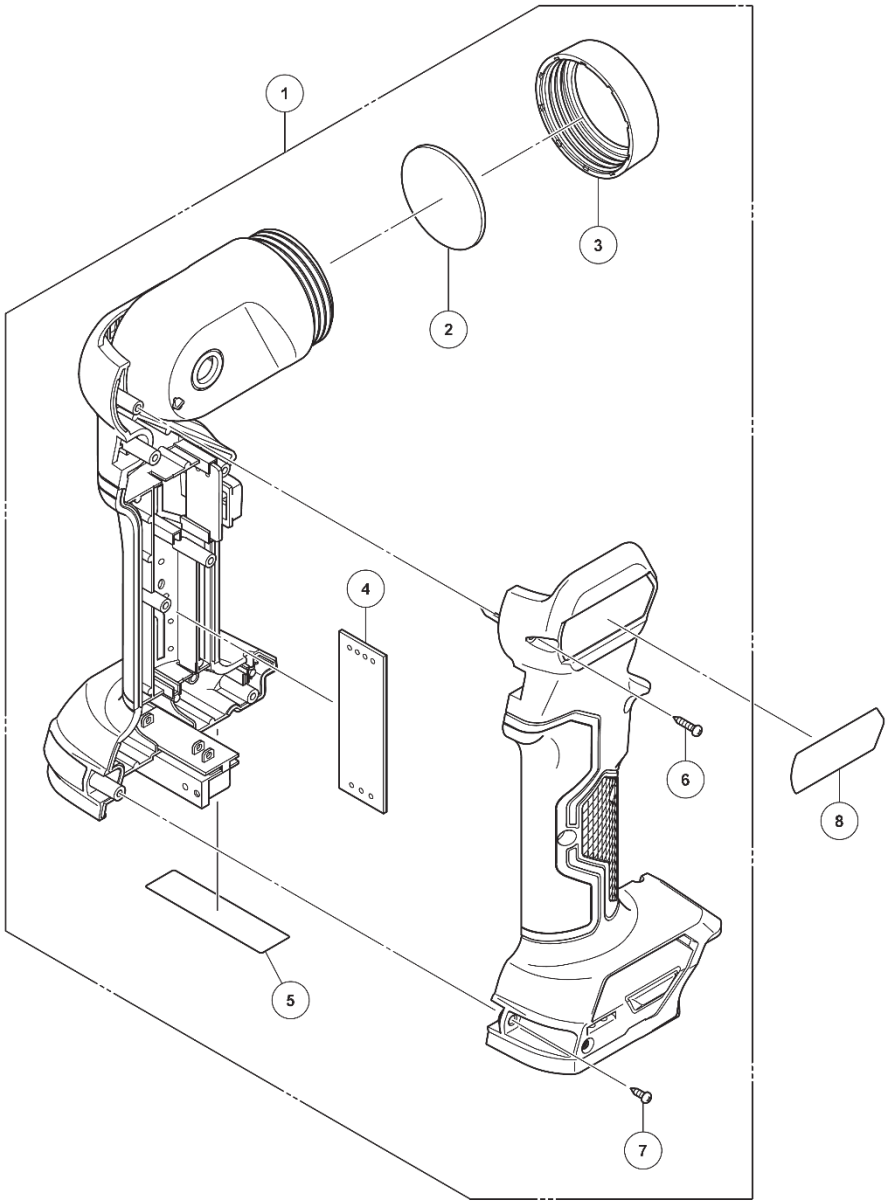

Rev.1

MODEL
UB18DE

PARTS

UB18DE

ITEM NO.	CODE NO.	DESCRIPTION	NO. USED	REMARKS
1		MAIN BODY	1	
2	379473	LENS	1	
3	379472	LENS COVER	1	
4	379474	MAIN PCBA	1	
**5		NAME PLATE (C)	1	FOR EUROPE.USA.CAN
6	379476	SCREW D3X20	1	
7	379475	SCREW D3X12	5	
8		NAME PLATE	1	

STANDARD ACCESSORIES

UB18DE

ITEM NO.	CODE NO.	DESCRIPTION	NO. USED	REMARKS

OPTIONAL ACCESSORIES

ITEM NO.	CODE NO.	DESCRIPTION	NO. USED	REMARKS